PRODUCT SHEET

Description:
Cent. Lock MIC1018/1200mm, ø19x20mm, 40mm Tail,CK:SISO,3x8 mm Pegs, NPL, MIC System J#12, W/1x1200mm Locking Bar,, 2 x Metal Bar Guides & 3 x 8mm Adjustable Pegs

Item number:
14.03.137-5

Units	Box	Carton	HS Code	Barcode
Pcs.	12	60	8301300000	5704866107488

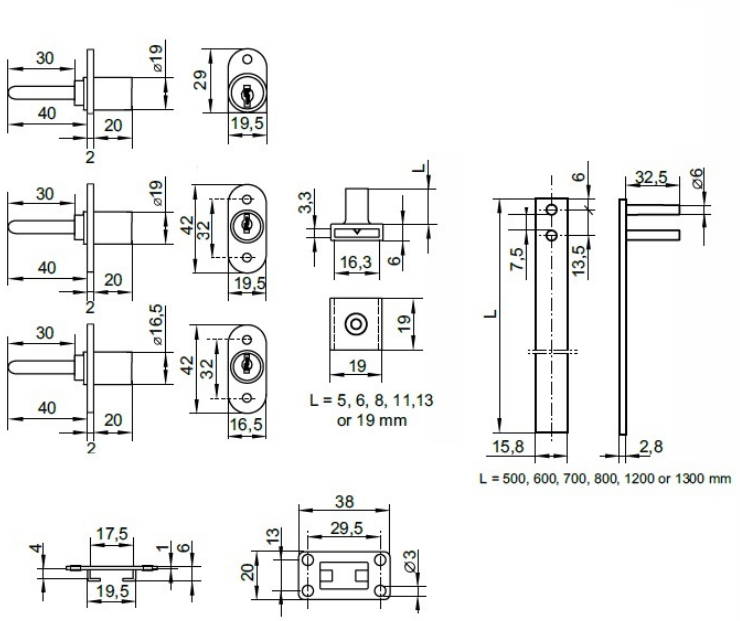

SISO A/S
Mileparken 11
DK-2740 Skovlunde
Denmark
VAT: DK 24786013

Phone +45 45 830 900

www.siso.dk
siso@siso.dk

Danske Bank
Nytorv Branch
Copenhagen
SWIFT: DABADKKK

Account no.
4180 3112 112936
IBAN Account
DK7230003112112936